IAPMO IGC 365-2021

PUBLIC REVIEW DRAFT

Industry Standard for

Elevator Threshold Drains

IAPMO Standard

Approval of an IAPMO Industry Standard requires verification by the Standards Review Committee that the standard has been developed in accordance with the policies and procedures for standards development (S-001, *Standards Development Process*, S-008, *Appeals* and S-011, *Operation of the IAPMO Standards Review Committee*). Although IAPMO administers the process and establishes rules to promote fairness in achieving consensus, it does not independently test, evaluate, or verify the content of standards.

Consensus is established when substantial agreement has been reached by directly and materially affected interests. Substantial agreement means much more than a simple majority, but not necessarily unanimity. Consensus requires that all views and objections be considered, and that a concerted effort be made toward their resolution.

The use of IAPMO Industry Standards is completely voluntary; their existence does not in any respect preclude anyone, whether they have approved the standards or not, from manufacturing, marketing, purchasing, or using products, processes, or procedures not conforming to the standards.

The Standards Review Committee has final authority on interpretation of any IAPMO Industry Standard. Moreover, no person save IAPMO designated staff shall have the right or authority to issue an interpretation of an IAPMO Industry Standard in the name of IAPMO. Requests for interpretations should be addressed to the secretariat or sponsor whose name appears on the title page of this standard.

CAUTION NOTICE: This IAPMO Industry Standard may be revised or withdrawn at any time. The policies and procedures require that action be taken periodically to reaffirm, revise, or withdraw this standard. Interested stakeholders of IAPMO Industry Standards may receive current information on all standards by signing up to receive updates and notices at the IAPMO Standards website www.IAPMOstandards.org.

Published by
International Association of Plumbing and Mechanical Officials (IAPMO)
4755 East Philadelphia Street, Ontario, California, 91761, USA
1-800-854-2766 • 1-909-472-4100

Visit the IAPMO Online Store at: www.IAPMOstore.org
Visit the IAPMO Standards website at: www.IAPMOstandards.org

Printed in the United States of America

Contents

Preface

IAPMO Standards Review Committee

1 Scope
- 1.1 Scope
- 1.2 Alternative Materials
- 1.3 Terminology
- 1.4 Units of Measurement

2 Reference Publications

3 Definitions

4 General Requirements
- 4.1 Materials
- 4.2 Outlet Connections

5 Testing Requirements
- 5.1 Test Specimen, Test Apparatus, and Conditioning
- 5.2 Flow Test
- 5.3 Weathering Test
- 5.4 Grate Load Test

6 Markings and Accompanying Literature
- 6.1 Markings
- 6.2 Visibility
- 6.3 Installation Instructions

Preface

This is the first edition of IAPMO IGC 365, Elevator Threshold Drains.

This Standard was developed by the IAPMO Standards Review Committee (SRC) in accordance with the policies and procedures regulating IAPMO industry standards development, Policy S-001, Standards Development Process. This Standard was approved as an IAPMO Industry Standard on Month DD, YYYY.

Notes:

(1) The use of the singular does not exclude the plural (and vice versa) when the sense allows.

(2) The use of IAPMO Standards is completely voluntary; their existence does not in any respect preclude anyone, whether he has approved the standards or not, from manufacturing, marketing, purchasing, or using products, processes, or procedures not conforming to the standards.

(3) This standard was developed using an open process and in accordance with IAPMO Standards Policy S-001, Standards Development Process*, which is available on the IAPMO Standards website (www.IAPMOstandards.org).*

(4) During its development, this Standard was made available for public review, thus providing an opportunity for additional input from stakeholders from industry, academia, regulatory agencies, and the public at large. Upon closing of public review, all comments received were duly considered and resolved by the IAPMO Standards Review Committee.

(5) This Standard was developed in accordance with the principles of consensus, which is defined as substantial agreement; consensus implies much more than a simple majority, but not necessarily unanimity. It is consistent with this definition that a member of the IAPMO Standards Review Committee might not be in full agreement with all sections of this Standard.

(6) Although the intended primary application of this Standard is stated in its scope, it is important to note that it remains the responsibility of the users of the Standard to judge its suitability for their particular purpose.

(7) IAPMO Standards are subject to periodic review and suggestions for their improvement will be referred to the IAPMO Standards Review Committee. To submit a proposal for change to this Standard, you may send the following information to the International Association of Plumbing and Mechanical Officials, Attention Standards Department, at standards@IAPMOstandards.org or, alternatively, at 4755 East Philadelphia Street, Ontario, California, 91761, and include "Proposal for change" in the subject line:

(a) standard designation (number);

(b) relevant section, table, or figure number, as applicable;

(c) wording of the proposed change, tracking the changes between the original and the proposed wording; and

(d) rationale for the change.

(8) Requests for interpretation should be clear and unambiguous. To submit a request for interpretation of this Standard, you may send the following information to the International Association of Plumbing and Mechanical Officials, Attention Standards Department, at standards@IAPMOstandards.org or, alternatively, at 4755 East Philadelphia Street, Ontario, California, 91761, and include "Request for interpretation" in the subject line:

(a) the edition of the standard for which the interpretation is being requested;

(b) the definition of the problem, making reference to the specific section and, when appropriate, an illustrative sketch explaining the question;

(c) an explanation of circumstances surrounding the actual field conditions; and

(d) the request for interpretation phrased in such a way that a "yes" or "no" answer will address the issue.

(9) IAPMO does not "approve", "rate", or endorse any item, construction, proprietary device, or activity.

(10) IAPMO does not take any position with respect to the validity of any patent rights asserted in connection with any items mentioned in this Standard and does not undertake to insure anyone utilizing this Standard against liability for infringement of any applicable patents, nor assumes any such liability. Users of this Standard are expressly advised that determination of the validity of any such patent rights, and the risk of infringement of such rights, are entirely their responsibility.

(11) Participation by federal or state agency representative(s) or person(s) affiliated with industry is not to be interpreted as government or industry endorsement of this Standard.

(12) Proposals for amendments to this Standard will be processed in accordance with the standards-writing procedures of IAPMO industry standards development, Policy S-001, Standards Development Process.

IAPMO Standards Review Committee

T. Collings	Building Services & Licensing - Retired Salt Lake City, Utah, USA	*Chair*
M. Durfee	Chief Building Official - Retired Saratoga Springs, Utah, USA	*Vice-Chair*
M. Antonacci	Plumbing and HVAC Inspector, City of Toronto Toronto, Ontario, CAN	
R. Coffman	Mechanical Inspector, City of Cedar Falls - Retired Cedar Falls, Iowa, USA	
C. Crimmins	MN State Pipe Trades - Retired Champlin, Minnesota, USA	
J. Krahenbuhl	Plumbing and Mechanical Plans Check Specialist, Clark County - Retired Las Vegas, Nevada, USA	
B. Olinger	William Myers & Sons Inc. - Semi-Retired East Hanover, New Jersey, USA	
S. Peters	Plumbing & Mechanical Plans Examiner Santa Monica, California, USA	
R. Rice	Sr. Mechanical Inspector - Retired Maplewood, Minnesota, USA	
G. Snider	Plumbing Section Supervisor, City of Surrey Surrey, British Columbia, CAN	
G. Istefan	IAPMO Ontario, California, USA	*Staff Liaison*
H. Aguilar	IAPMO Ontario, California, USA	*Secretary*

IAPMO IGC 365-2021
Elevator Threshold Drain

1 Scope

1.1 Scope

This Standard covers linear trench drains intended for elevator threshold applications and specifies requirements for materials, physical characteristics, performance testing, and markings.

1.2 Alternative Materials

The requirements of this Standard are not intended to prevent the use of alternative materials or methods of construction provided such alternatives meet the intent and requirements of this Standard.

1.3 Terminology

In this Standard,

(a) "shall" is used to express a requirement, i.e., a provision that the user is obliged to satisfy to comply with the Standard;
(b) "should" is used to express a recommendation, but not a requirement;
(c) "may" is used to express an option or something permissible within the scope of the Standard; and
(d) "can" is used to express a possibility or a capability.

Notes accompanying sections of the Standard do not specify requirements or alternative requirements; their purpose is to separate explanatory or informative material from the text. Notes to tables and figures are considered part of the table or figure and can be written as requirements.

1.4 Units of Measurement

SI units are the primary units of record in global commerce. In this Standard, the inch/pound units are shown in parentheses. The values stated in each measurement system are equivalent in application, but each unit system is to be used independently. All references to gallons are to U.S. gallons.

2 Reference Publications

This Standard refers to the following publications and, where such reference is made, it shall be to the current edition of those publications, including all amendments published thereto.

ASME International (The American Society of Mechanical Engineers)
ASME A112.6.3
Floor and Trench Drains

ASTM International
ASTM D2240
Standard Specification for Rubber Property-Durometer Hardness

ASTM D638
Standard Specification for Tensile Properties of Plastics

British Standards
EN 1433
Drainage channels for vehicular and pedestrian areas - Classification, design and testing requirements, marking and evaluation of conformity

3 Definitions

The following definitions shall apply in this Standard:

Elevator Drain — A trench elevator threshold drain installed in front of elevator shaft or lobby to prevent any water from draining inside of the elevator shaft.

4 General Requirements

4.1 Materials

Materials utilized must comply with Materials section in ASME A112.6.3

4.2 Outlet Connections

Outlet connections must comply with Outlets section in ASME A112.6.3

5 Testing Requirements

5.1 Test Specimen, Test Apparatus, and Conditioning

5.1.1 Test Specimen

The test specimen shall consist of an elevator threashold drain and appropriately corresponding grate.

5.1.2 Test Apparatus (See Figures 1, 2 and 3)

The test apparatus shall consist of the main stand, plus two L-Shaped positioning weirs on top of positioning weir tables. The main stand consists of a 4.9 X 4.9 m (16 X 16 ft) panel with 203.2 mm(8 in) high side panels on three sides to encapsulate the water. The test apparatus shall be sloped at a 6.35 mm (0.25 in) per foot towards the front side of the test stand, where the elevator drain gets installed. A 1 38.1 mm (1.5 in) high trough weir positioned 609.6 mm(24 in) from the back of the test apparatus shall be installed. This feature will be known as the test stand trough.

Two positioning weir tables assist in supporting different length of elevator drains. The table's top footprint is approximately 787.4 mm (31 in) deep X 2.4m (8 ft) long each, and move indepentently from the main stand to allow for different length drains. The elevator drain gets installed in between the two positioning weir tables by resting on angle iron to support the ends of the drain. This angle iron support shall have leveling screws to level the drain lengthwise and widthwise. Additional supports may be needed for longer drains.

The drain shall have a schedule 40 PVC DWV 90 elbow connected to the outlet of the drain by means of a short length of PVC pipe, no longer than 101.6 mm (4 in). The outlet of the elbow shall have PVC pipe connected to it and be sloped 6.35 mm (0.25 in) per foot back to a collection tank.

5.2 Flow Test

5.2.1 Test Procedure

The flow test for elevator drains shall be conducted as follows:

(a) Install the elevator drain body into the elevator drain test stand such that the front edge of the drain is flush to the main stand,± 0.8 mm (0.03125 in).
(b) Ensure that the elevator drain body is installed and level per the manufacturers recommendations.
(c) Move the positioning weirs to the front position, only exposing the front side of the elevator drain to incoming water.
(d) Tape off the edges of the drain body ensuring no more than minimal leaks will occur when water is flowing into the body.
(e) Install the grate into the body. If a lock down devise and hardware are to be used per the manufacture, install them as well.
(f) Attach an elbow and pipe to the outlet of the drain per the test apparatus section above.
(g) Start pumps to deliver water to the test stand and drain.
(h) Slowly ramp up the flow of water while monitoring the water level into the drain body. If water begins to overflow the drain body you have exceeded the maximum flowrate of the drain. If water overflows, reduce the flowrate until it no longer overflows.
(i) Once maximum flowrate appears to be achived for drain beingtested, allow the water to stabilize for 10 min. Do not adjust the flowrate anymore.
(j) Begin the test. Using a data acquisition system, start the test and begin collecting the flowrate delivered to the drain at a rate of once per second for 10 min.

5.2.2 Performance Requirement

Elevator threshold drains shall be in accordance with the following requirements:
During the 10 min test, no water can overflow the drain body. If water does overflow the drain body, the drain fails and the flow being deleived to it is higher then the maximum flow capacity of the drain. The test must be repeated at a lower flow. If no overflow has occurred, average the 600 data points for flow to determine the maximum flow capacity of the drain. Once a max flow has been established, it can be correlated to a class specification referenced in Table 1, The system shall achieve a minimum of 25 gpm, anything less than that shall be considered failure.

5.3 Weathering Test

5.3.1 Test Procedure

The weathering tesdt for elevator threshold drains shall be conducted in accordance with Section 7, Weathering Test of ASME A112.6.3 with the following addition:

(a) Hardness shall be tested in accordance with ASTM D2240; and
(b) Tensile strength shall be tested in accordance with ASTM D638.

5.3.2 Performance Requirements

Elevator threshold drains specimen material shall maintain a:

(a) Tensile strength of at least 90% of its original value; and
(b) Hardness of within ± 20% of its original value.

5.4 Grate Load Test

5.4.1 Test Procedure

The grate load test for elevator threshold drains shall be conducted in accordance with Section 6, Loading Test of ASME A112.6.3, or Section 9.1, Load Test of EN 1433.

5.4.2 Performance Requirements

Elevator threshold drains shall withstand a minimum safe live load equivalent to the light duty classification of ASME A112.6.3, or the class A requirements of EN 1433, and shall be in accordance with the point of failure requirements with the following change applied only to the ASME A112.6.3 requirements:

For ductile materials the failure load shall be the load at which the permanent set is greater than 3% of the grate width dimension of the specimen.

6 Markings and Accompanying Literature

6.1 Markings

Elevator threshold drains complying with this Standard shall be marked with the:

(a) manufacturer's name or trademark;
(b) Flow Classification per this standard (i.e., “Class A per IAPMO IGC 365”)

6.2 Visibility

Markings shall be permanent, legible, and visible after installation.

6.3 Installation Instructions

Elevator Threshold Drains shall be accompanied by instructions for their installation, care and maintenance, and repair.

Table 1

Flow Rate Tiers	
Flow Classification	Flow Range (GPM)
A	≥100
B	75 <100
C	50 <75
D	25 <50

Figure 1 – ISO View

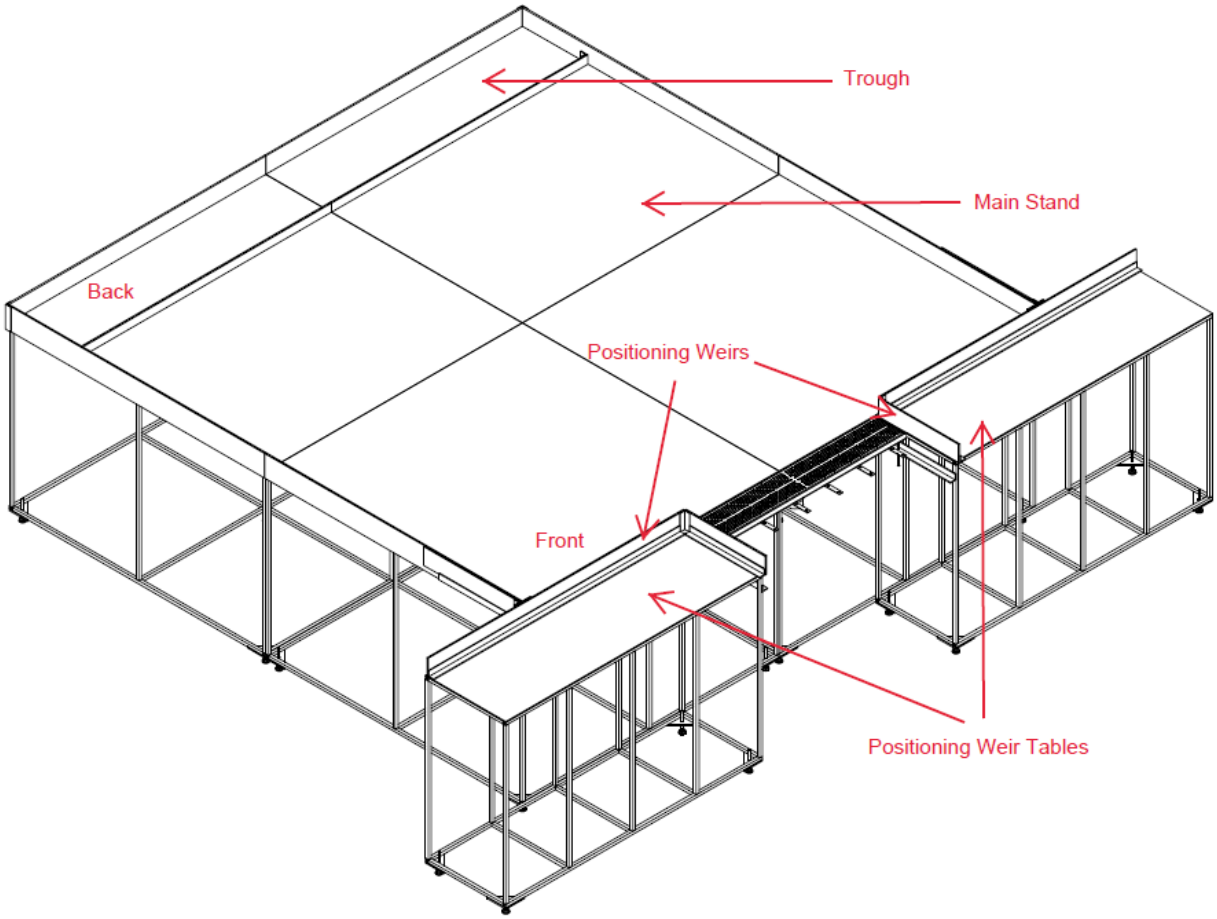

Figure 2 – Elevator Drain Side View

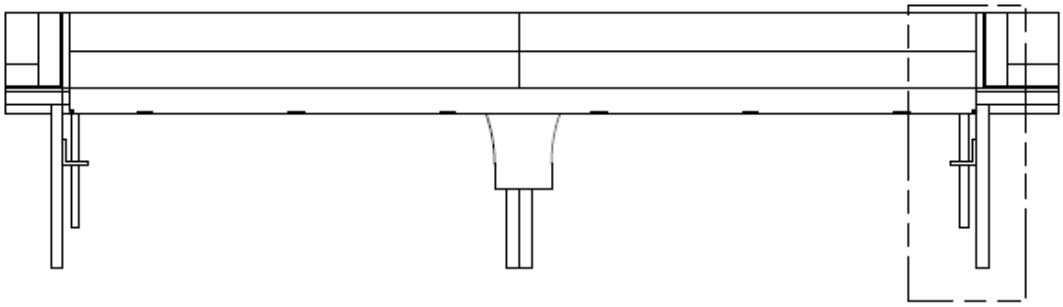

Figure 3 – Elevator Drain Section View

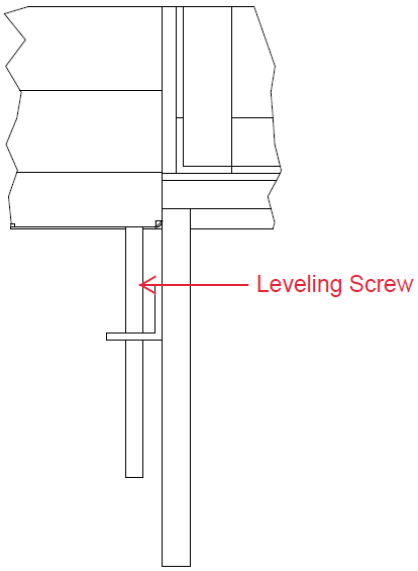

Published by
International Association of Plumbing and Mechanical Officials (IAPMO)
4755 East Philadelphia Street, Ontario, California, 91761, USA
1-800-854-2766 • 1-909-472-4100